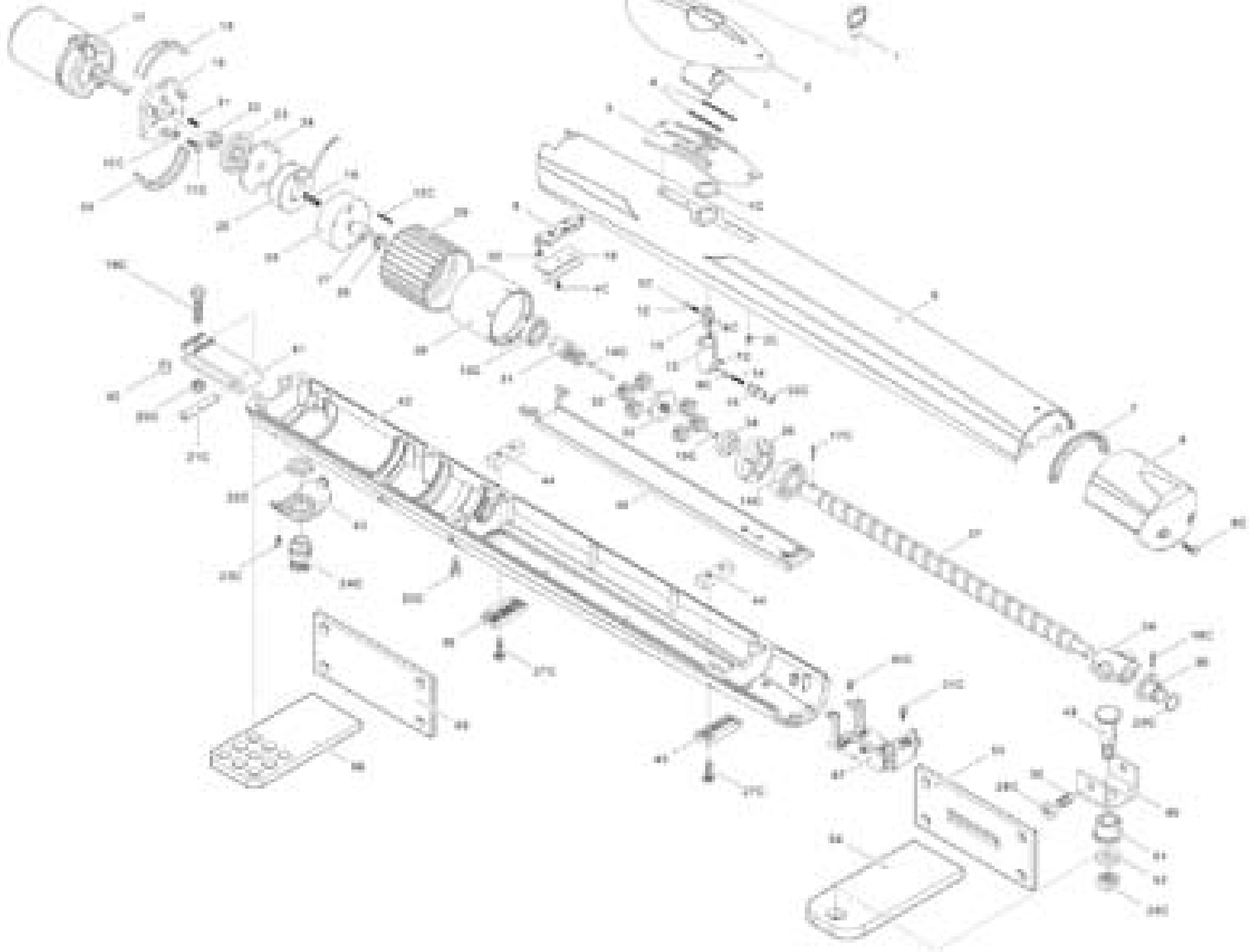CAME A1824