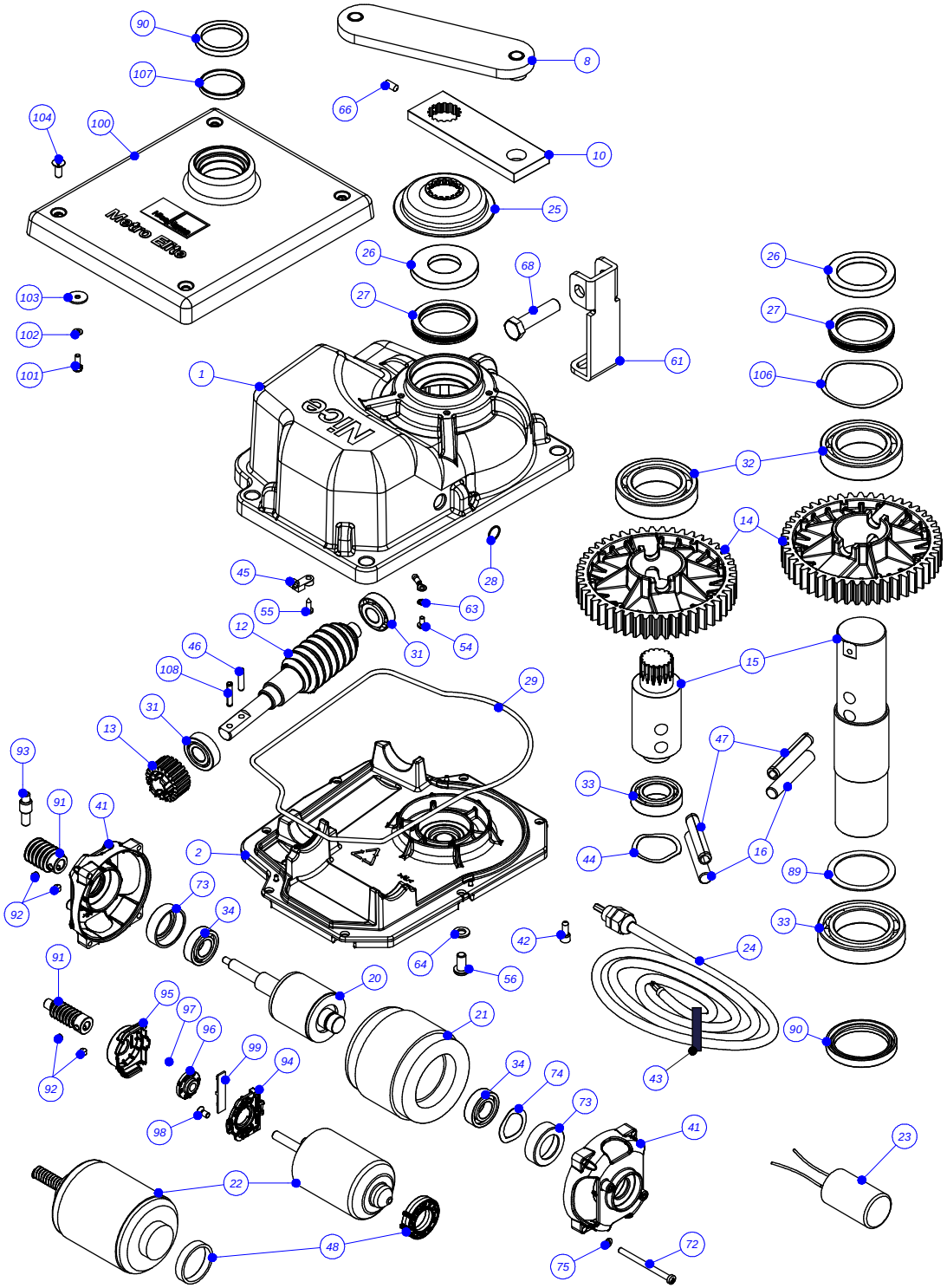
Micro Elite
Nice